Rev	AWO #	Description	Date	Appr
-		RELEASED	6/21/07	
A		REVISED DIM.	9/03/09	

APPROVED: _____

DATE: _____ TITLE: _____

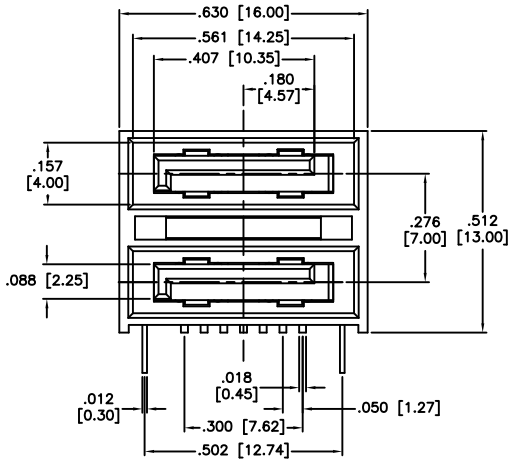

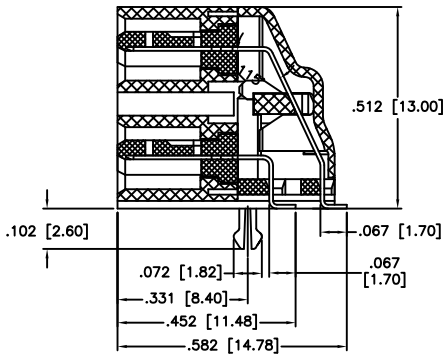

SECT A–A

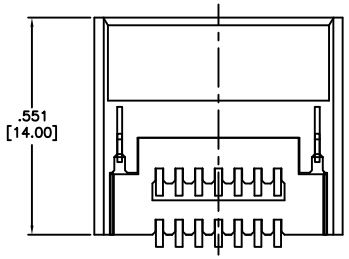

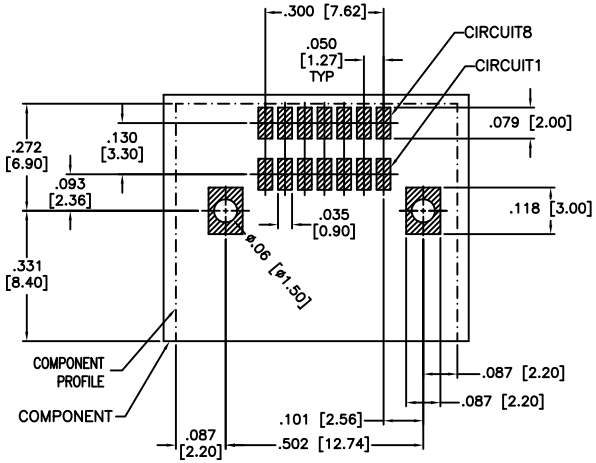

RECOMMENDED PCB LAYLOUT

SPECIFICATIONS:

Material:
Insulator: LCP, rated UL 94V–0
Insulator color: Black
Contacts: Brass

Plating:
Gold Flash over Nickel underplate on contact area, Tin over Copper underplate on SMT tails

Electrical:
Operating voltage: 100 VAC max
Current rating: 1.5 Amps max
Contact resistance: 30 mΩ max
Insulation resistance: 1000 Mohms min
Dielectric withstanding voltage: 500 VAC for 1 minute

Temperature Rating:
Operating temperature: –55°C to +125°C

Environmental:
Lead free, RoHS compliant.
Recommended soldering temp: 260°C for 5 sec.

RoHS COMPLIANT

UNLESS OTHERWISE SPECIFIED
ALL DIMENSIONS ARE INCHES [MM]
TOLERANCES: EXCEPT AS NOTED

INCHES		HOLES	
.X	± .10	Ø.X	±.10
.XX	± .020	Ø.XX	±.015
.XXX	± .015	Ø.XXX	±.010

APPROVALS		DATE
DRAWN	SS	6/21/07
CHECKED		
APPROVED		

ADAM TECH
909 Rahway Avenue, Union, NJ 07083
Phone: 908-687-5000 Fax: 908-687-5710

TITLE: SERIAL ATA CONNECTOR, TYPE D, LEFT POLARIZATION, SMT, SIDE SLOTS

SIZE	PART NO.	REV.
X	SATA-D-PL-SMT-S	A

REF: | SCALE: NTS | SHEET 1 OF 1